ESI-2020

CONTROL INTERFACE UNIT

The ESI-2020 is a multi-purpose interface device that is designed to support a number of communications functions in Utah Scientific router / master control systems.

The ESI-2020 hardware platform is housed in a 1RU rack mount chassis with dual power supplies, a main logic board, and up to three device interface boards. A front panel display is used to show device status and to provide feedback on a number of diagnostic and set-up procedures.

The main logic board supports several different embedded software packages that tailor the ESI-2020 to certain applications. For other applications, consult your Utah Scientific representative for information on software options that are available in addition to the functional packages described here.

ESI-2020 FEATURES

- Master Control Machine Interface --up to 12 machines per unit
- Dual redundant power supplies are standard equipment.
- Optional Automation Pass-through configuration.
- Space-saving 1 RU package.
- Also supports other applications in remote control and master control systems.

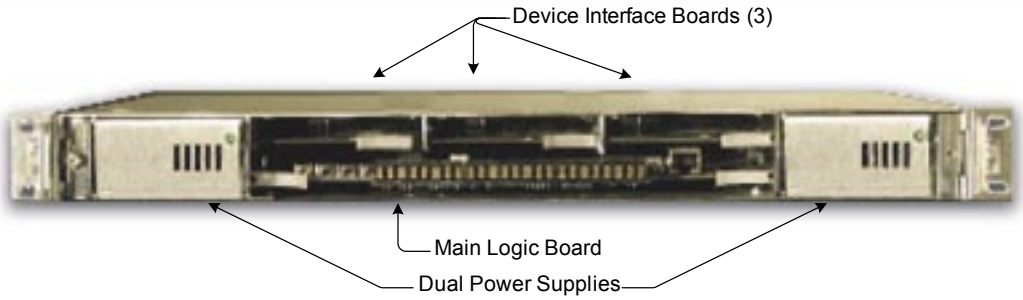

Machine Control Applications– ESI-2020

In this configuration, the ESI-12 is used to provide RS-422 machine control links to devices that are under the control of the MC-2020 Master Control Switcher. Up to 12 devices can be connected to each ESI-2020 unit, multiple units can be used to add capacity as needed.

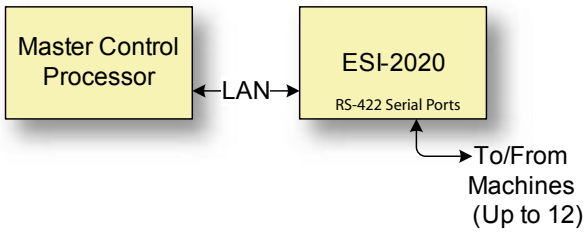

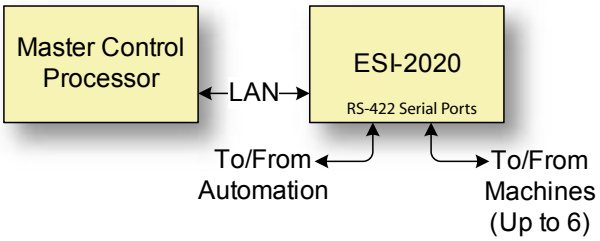

An optional configuration of this device is for control of six machines with each machine assigned to a pair of ports. The second port for each machine is connected to an automation system. In this application, the ESI-2020 listens to the status messages from the machines to provide feedback to the operator and when manual intervention is required the operator can take control of the machine from the MC-2020 control panel.

Remote Control Processing Applications– ESI-12 RCP

In this configuration, the ESI-12 is used as a data concentrator to provide interface between the Utah Scientific routing system's ethernet control LAN and up to 12 RS-232/422 serial ports. A typical application for this device is in systems where router control panels are located remotely from the router with serial links connecting the panels to the router location. These links can be direct cable connections or modem links, either dial-up or leased-line.

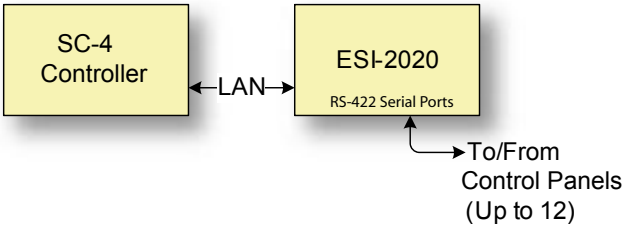

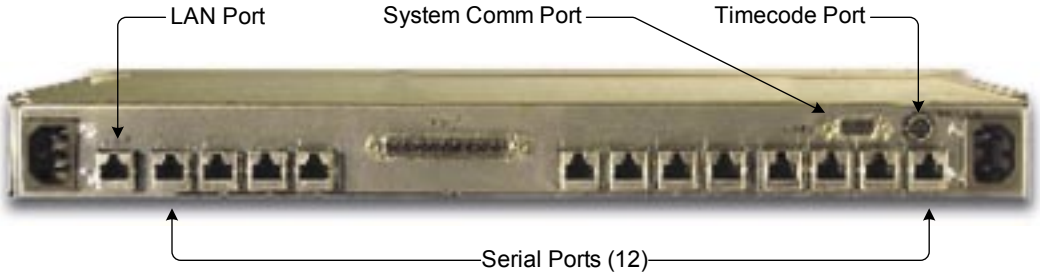

FOR FURTHER INFORMATION

on the individual products in the Master Control family, please refer to the detailed data sheets that are available on our Web Site:

www.utahscientific.com

www.utahscientific.com
E-mail: sales@utsci.com

Utah Scientific

4750 Wiley Post Way -- Suite 150
Salt Lake City, Utah 84116
Phone: +1 (801) 575-8801
Fax: +1 (801) 537-3099

Via Filli Bandiera, 52
20050 Verano Brianza (MI)
Italy
Phone: +39 0362 330 001

Thoroyaveien 11
3209 Sandefjord
Norway
Phone: +47 33 522 700